Examples on Dynamic Array and Hashing

Dan (Doris) He

ITEE
University of Queensland

Dynamic Array Problem

Let S be a multi-set of integers that grows with time. At the beginning, S is empty. Over time, the integers of S are added by the following operation:

- insert(e): which adds an integer e into S.

At any moment, let n be the number of elements in S. We want to store all the elements of S in an array A satisfying:

1. A has length $O(n)$
2. If an integer x was the i-th ($i \geq 1$) inserted, then $A[i] = x$ (i.e., x is at the i-th position of the array).

Example

Input:

41, 12, 37, 9, 12, 63, 15, 33, 7, 41, 52, 33, 11, 9, 27, 8, 31 ...

- Before the first insertion, A is an empty array.
- insert(41): Create an array A with length 2

41	

- insert(12): A is full. Create another array A' with length 4, copy the two elements in A to A', destroy A, replace it with A'.

~~41~~	~~12~~

41	12		

Example

Input:

41, 12, 37, 9, 12, 63, 15, 33, 7, 41, 52, 33, 11, 9, 27, 8, 31 · · ·

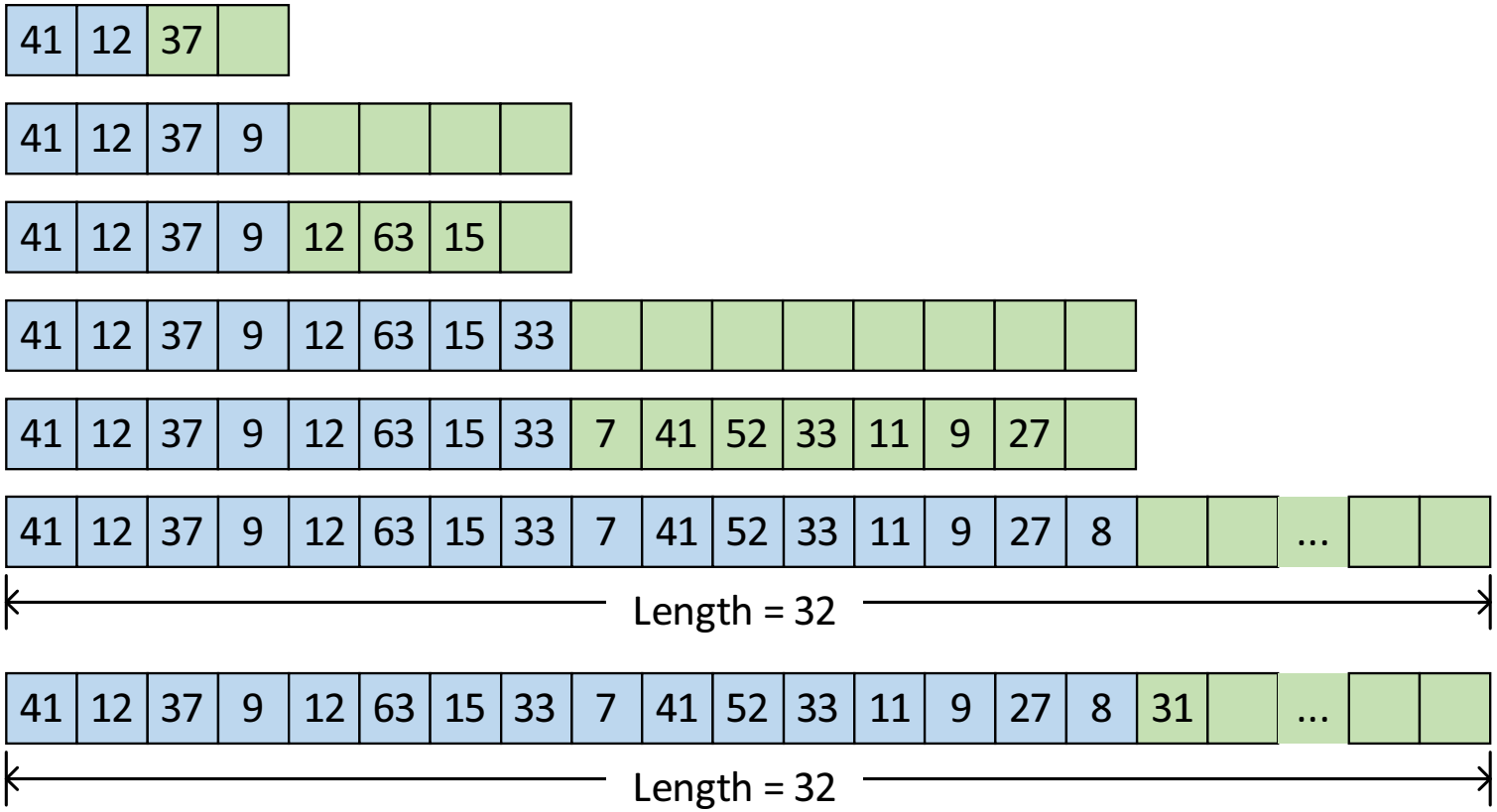

Stack-with-Array Problem

Let S be a multi-set of integers that grows with time. At the beginning, S is empty. We must support the following stack operations:

- push(e): which adds an integer e into S.
- pop: which removes from S the most recently inserted integer.

At any moment, let m be the number of elements in S. We want to store all the elements of S in an array A satisfying:

1. A has length $O(m)$
2. $A[1]$ is the least recently inserted element, $A[2]$ the second least recently inserted, ..., $A[m]$ the most recently inserted.

We will denote by n the number of operations processed so far.

Example

Operations:

push(32), push(15), push(7)

pop, pop

push(18), push(32), push(9), push(12), push(64)

pop, pop, pop, pop,

push(5), push(11)

Example

- At the beginning, create an array A with length 4.
- After push(32), push(15), push(7), $m = 3$.

32	15	7	

- pop: Return $A[3] = 7$. At this moment, $m = 2$.

32	15		

- pop: Return $A[2] = 15$. Now, $m = 1$.

32			

Example

- push(18), push(32). At this moment, $m = 3$.

32	18	32	

- push(9). At this moment, $m = 4$, and A is full. So we expand A (same as dynamic array insertion)

32	18	32	9				

- push(12), push(64). At this moment, $m = 6$.

32	18	32	9	12	64		

Example

- pop: return $A[6] = 64$; $m = 5$.
- pop: return $A[5] = 12$; $m = 4$.
- pop: return $A[4] = 9$; $m = 3$.
- pop: return $A[3] = 32$; $m = 2$. At this moment, A becomes sparse. Shrink A as follows: create an array A' with length 4, copy the elements in A to A', destroy A and replace A with A'.

32	18						

32	18		

- After push(5) and push(11), $m = 4$.

32	18	5	11				

Hashing

A Universal Function

- Pick a prime number p such that
  - $p \geq m$.
  - $p \geq$ any possible integer k
- Choose a number α uniformly at random from $1, ..., p-1$.
- Choose a number β uniformly at random from $0, ..., p-1$.
- Construct a hash function:

$$h(k) = 1 + ((\alpha k + \beta) \mod p) \mod m$$

Example

Let $S = \{33, 42, 70, 38, 6, 22, 17, 51, 8, 14, 63, 27\}$.
Suppose that we choose $m = 10$, $p = 71$, $\alpha = 3$, $\beta = 7$ and
$h(k) = 1 + (((3k + 7) \mod 71) \mod 10)$.

k	$h(k)$
33	6
42	3
70	5
38	1
6	6
22	3
17	9
51	9
8	2
14	10
63	5
27	8

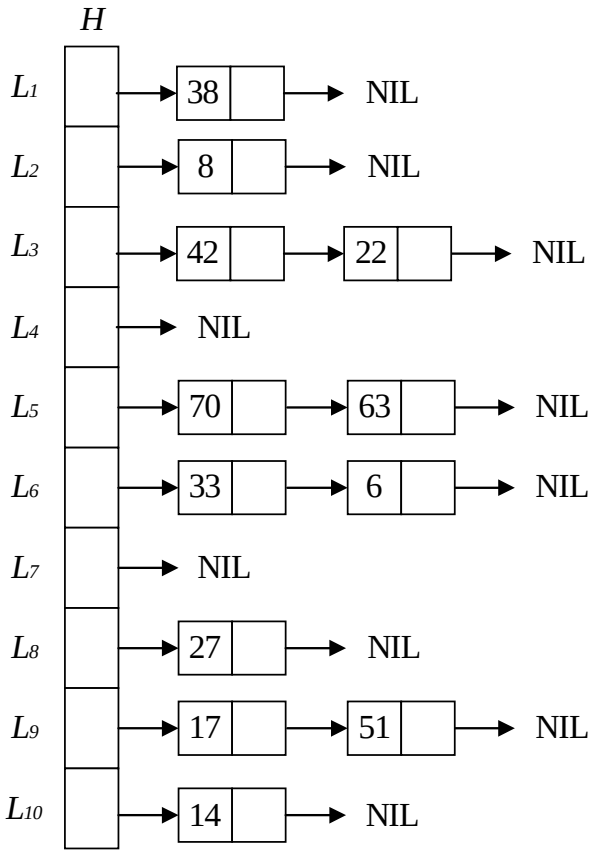

How to answer a query with search value 51? How about 52?

Dynamic Array – A New Version

In the following, we will discuss a variant of dynamic arrays with smaller space consumption.

Recall that, while performing insertions to a dynamic array A, once A is full, we expand A by doubling the current length. We have proved that each insertion costs $O(1)$ amortized time and that the space consumption is $O(n)$ at any moment, where n is the number of elements in A.

In fact, it is not necessary to restrict the expansion to doubling. In the following, we will show that each insertion still costs $O(1)$ amortized time as long as we expand the length of A to $(1+\epsilon)n$ for any constant $\epsilon > 0$.

Dynamic Array – A New Version

Suppose that an array expansion occurs when A is full with n elements and that this expansion takes $c \cdot n$ time.

- The previous expansion happened when A was full with $\frac{n}{1+\epsilon}$ elements.
- There were $n - \frac{n}{1+\epsilon} = \frac{\epsilon n}{1+\epsilon}$ empty positions right after the previous expansion.
- $\frac{\epsilon n}{1+\epsilon}$ insertions have taken place since the previous expansion.
- Charge the $c \cdot n$ cost over those $\frac{\epsilon n}{1+\epsilon}$ insertions.
- Each of those insertions bears additional $cn/\frac{\epsilon n}{1+\epsilon} = \frac{c(1+\epsilon)}{\epsilon} = O(1)$ cost and each of them is charged only once.

Hashing

As discussed in the lecture, to achieve $O(1)$ expected query time in dictionary search, we should choose a $m = \Theta(n)$. Suppose that $m = c \cdot n$, where c is a constant. Next, we will explore the effects of c.

- Space consumption at the order of $O(n + m) = O(n + c \cdot n)$.
- Query time $O(1 + n/m) = O(1 + \frac{1}{c})$ in expectation, where:
  - "1" captures the cost for access the hash table to obtain the the head of the corresponding linked list.
  - "$\frac{1}{c}$" indicates the expected number of elements in that linked list.

As we can see from the above, for different choices of c, there is a tradeoff between the sapce consumption and the query time.

Hashing

- $m = \frac{1}{2}n$:
  - Space consumption $O(n + m) = O(n + \frac{1}{2} \cdot n)$.
  - Query time $O(1 + n/m) = O(1 + 2)$ in expectation.

Hashing

- $m = 10n$:
  - Space consumption $O(n + m) = O(n + 10 \cdot n)$.
  - Query time $O(1 + n/m) = O(1 + \frac{1}{10})$ in expectation.

Recall that $\frac{1}{10}$ is the expected number of the elements that we need to visit in answering a query. It means that in expectation, in 9 out of 10 queries, we need to access no elements at all.